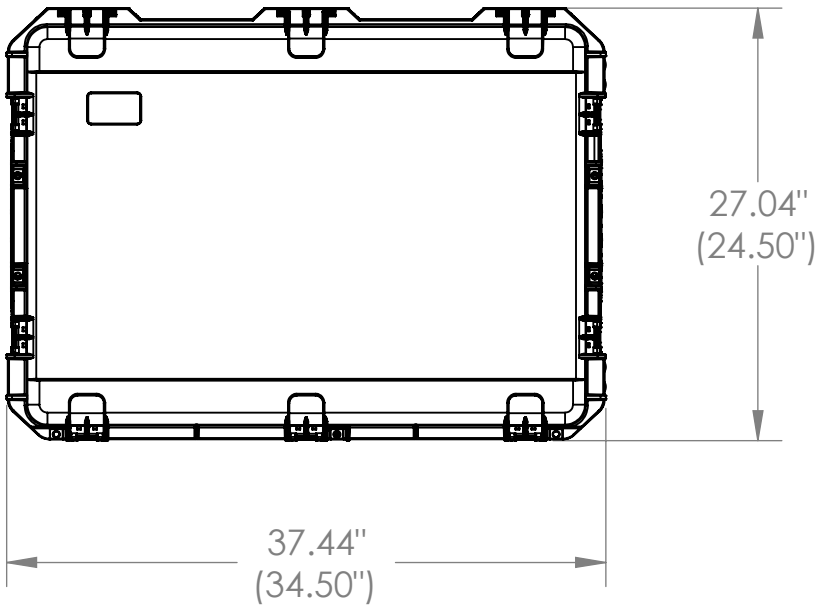

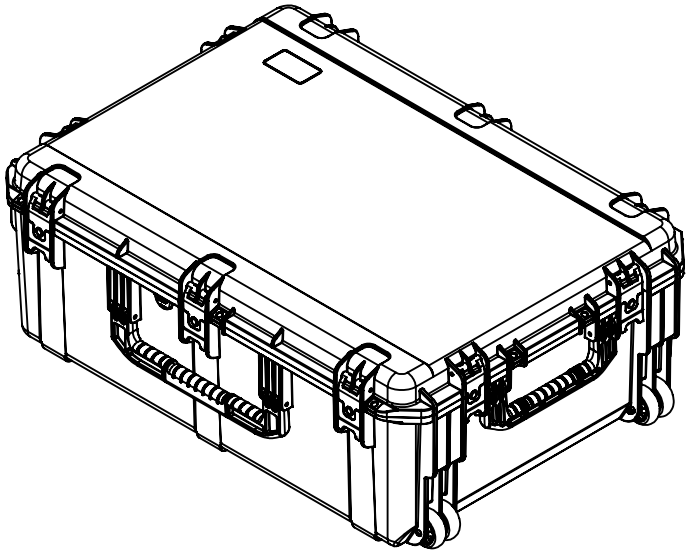

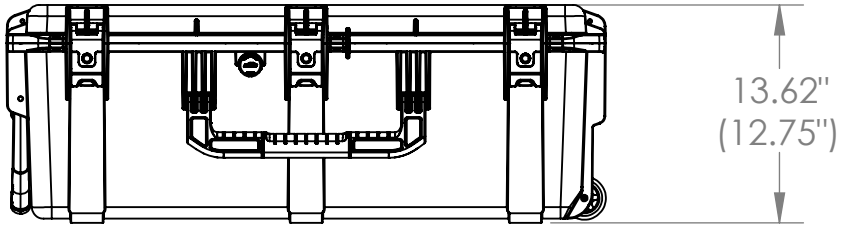

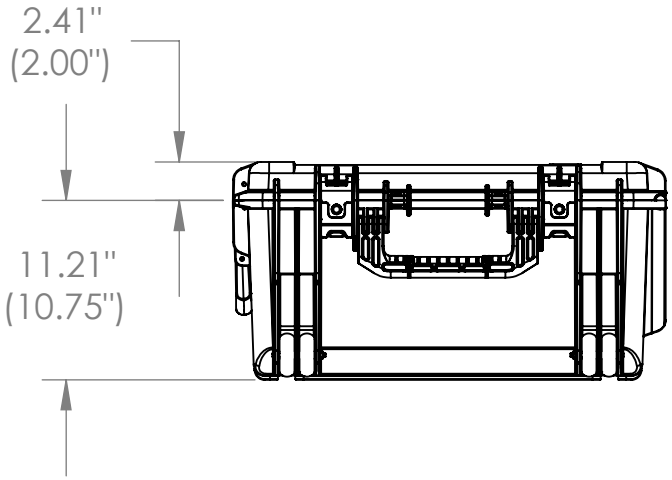

3i-3424-12

NOTE: DIMENSIONS IN (X.XX) ARE ID

300 Mears Blvd.
Oldsmar, FL 34677
Phone: (813) 891-1313
Fax: (813) 891-9988
http://www.allcases.com

Case Series:	3i Series	Dimensions (for reference only)			
Case part#	3i-3424-12		Length	Width	Overall	Base / Lid
			left to right	front to back	height	height
Weight:		Exterior	37.44"	27.04"	13.62"	11.21"-2.41"
		Inerior	34.50"	24.50"	12.75"	10.75"-2.00"

5 4 3 2 1